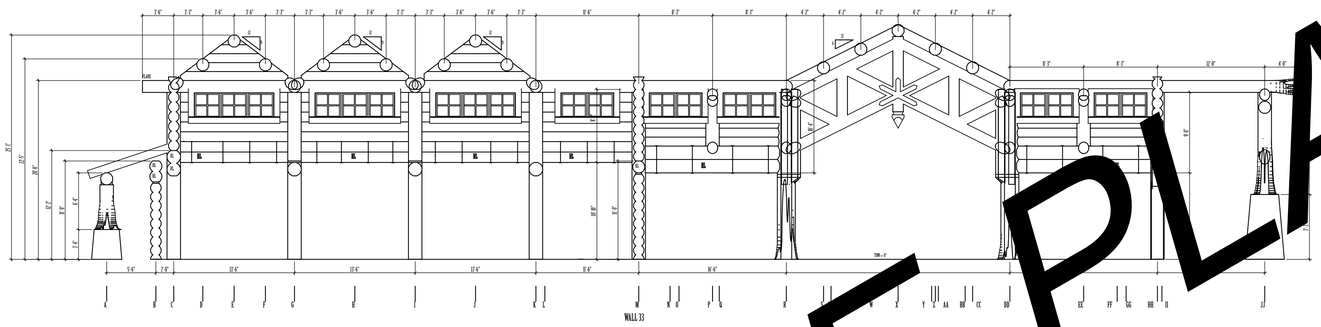

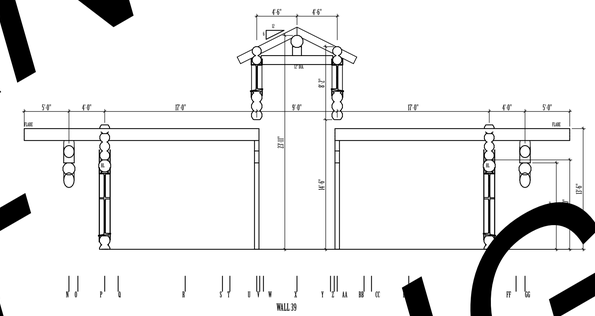

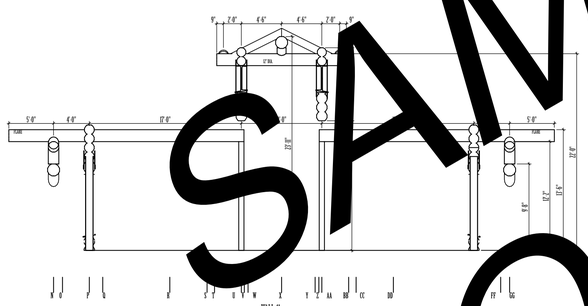

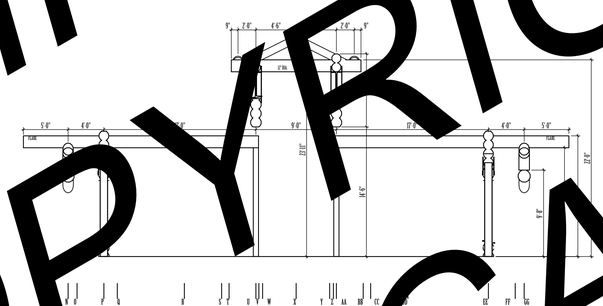

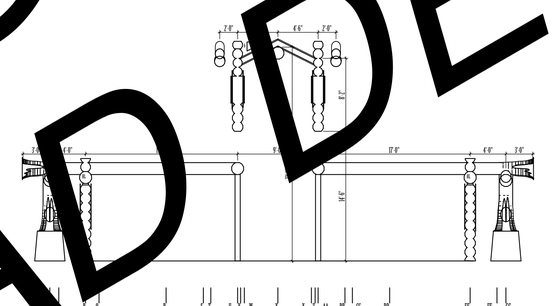

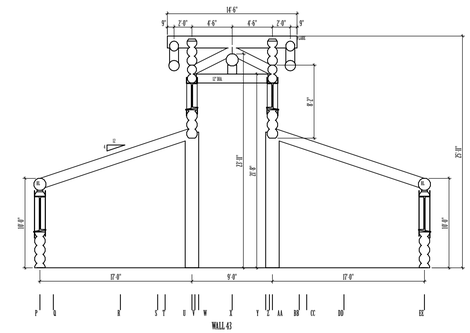

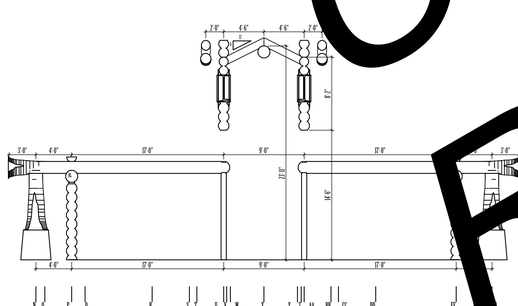

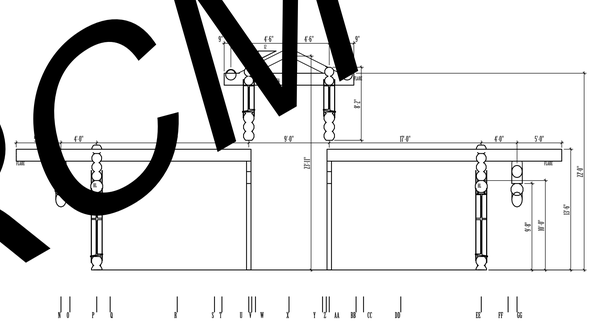

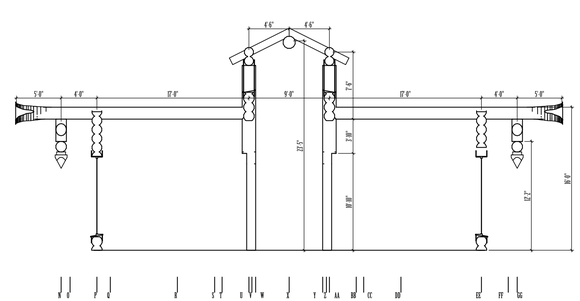

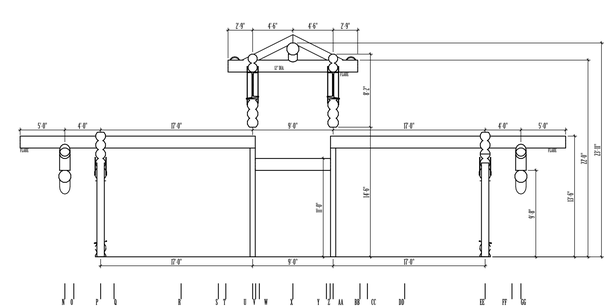

SAMPLE PLAN
COPYRIGHT
RCM CAD DESIGN

NOTE:
COMPLETE SET OF PLANS TO BE ENGINEERED & STAMPED BY STATE LICENSED ENGINEER

- ALL DIMENSIONS TO BE VERIFIED ON SITE BY GENERAL CONTRACTOR
- ALL DIMENSIONS ARE CONSTRUCTION TIME DIMENSIONS
- IT IS THE GENERAL CONTRACTOR'S RESPONSIBILITY OF THE GENERAL CONTRACTOR TO CHECK & VERIFY ALL DIMENSIONS & SPECIFICATIONS ON THIS SET OF PLANS BEFORE STARTING CONSTRUCTION
- ALL LOG DIAMETER SIZE TO BE MEASURED AT MID SPAN
- BUILDER IS RESPONSIBLE FOR CONFORMING WITH ALL LOCAL BUILDING CODES AND PRACTICES

R.C.M. Cad Design
Drafting Ltd.
RCM CAD DESIGN
PO BOX 8006
SUMAS, WA. 98295-8006
PHONE: (604) 850-0724 FAX: (604) 850-0721
www.loghomedesign.ca

SCALE:	1/8" = 1'-0"
DATE:	JAN. 16, 2007
DRAWN BY:	C.C.
CHECKED BY:	C.C.

REVISION:	DATE:	DESCRIPTION:
REV. 1		
REV. 2		
REV. 3		

LOG BUILDER :

CLIENT : WYOMING

TITLE: WALL SECTIONS

19 / 24